Proxim GX60™

60 GHz Multi-Gigabit Radio Platform

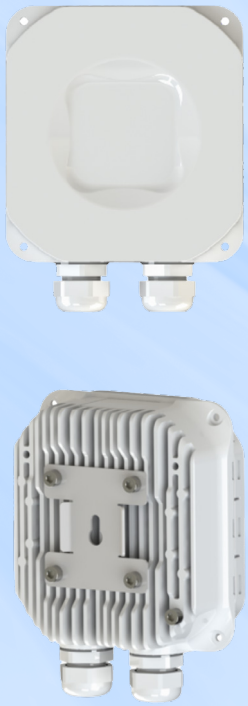

Product Snapshot

The Proxim GX60™ is an outdoor multi-gigabit radio platform that delivers high-performance connectivity at a fraction of the cost of fiber infrastructure. It operates in the unlicensed 60 GHz band (57–71 GHz). Providing up to 2 Gbps throughput in both point-to-point and point-to-multipoint topologies, the GX60 includes an integrated 90° beam-forming antenna for easy alignment. You can pair the GX60 with antenna kits to convert the radio from a wide beam-steering device to a highly directional antenna.

- Operates as Access Point, Station (Client), or Point-to-Point
- Frequency Range: 57 -71 GHz
- Advanced Networking & VLAN Architecture
- 2.5 Gbps Ethernet with POE in (PD), 1 Gbps Ethernet with POE out (PSE)

Security

Over the air transmission is secured via 128-bit AES encryption.

Wide Band Radio

With 14 GHz of largely unutilized spectrum, the unlicensed 60 GHz band allows multi-gigabit data rates to enable high-capacity fixed access services to homes and businesses, infrastructure networks, smart cities and public Wi-Fi.

Management Security

Management options include TLS 1.3 web GUI, and SNMP v3 (read only) for ProximVision Advanced monitoring, and other network management solutions.

Network & VLAN Features

The GX60 provides two separate VLANs-a management VLAN and a data VLAN. Here is some additional information about the VLANs:

- The data VLAN contains automatic tagging, or untagging, over wireless links.
- An alt-local IP address guarantees fallback IPv4 address access.
- The local static IP address on a data bridge option provides access to the local UI over the data network.

Specifications

PRODUCT MODELS

GX60-6019X-WD	Proxim GX60™ unit, 2 Gbps, 16 dBi - 90 degree Beamforming Phase Array - WD PoE	PN: 915-00003

INTERFACES

WIRED ETHERNET	One auto MDI-X RJ45 2.5 Gbps Ethernet with 802.3at PoE in One auto MDI-X RJ45 1 Gbps Ethernet with 48 VDC - 0.5 A PoE out
WIRELESS PROTOCOL	proprietary TDMA scheduling protocol

RADIO & TX SPECS

STATION SCHEDULING	TDMA: dynamic scheduling mechanism
DUPLEXING	TDD
FREQUENCY	57-71 GHz: Full (channels: 1-6), half (channels: 1-11) (Subject to Country Regulations)
CHANNEL SIZE	Full (2 GHz), half (1 GHz)
Max EIRP	38 dBm (integrated antenna), up to 60 dBm with antenna kit

ANTENNA

GX60-6019X	16 dBi 3D beamforming phased array with +/- 45° azimuth (90° total) and +/- 25° elevation (50° total).

MANAGEMENT

REMOTE	Web GUI and TLS 1.3, SNMP v1/v2c/v3 and RESTful API
OTHER	Syslog, NTP, LLDP

SECURITY

ENCRYPTION	AES 128 + GCMP
AUTHENTICATION	Web user access control via local list or Radius based Authentication

NETWORK

MODES	Bridging
IP STACK	IPv4 and IPv6
VLAN	802.1Q: Management VLAN. Transparent, Access (client only). QinQ double tagging

POWER

802.3at compliant

POWER CONSUMPTION

17 W (41 W with PoE out)

ENVIRONMENTAL SPECS	OPERATING TEMPERATURE	STORAGE TEMPERATURE	HUMIDITY - IP RATING	WIND LOADING
	-30° to 55°C		100% relative humidity	180 km/h (112.5 mph)
	-22° to 131° Fahrenheit		IP67	
PHYSICAL SPECS	DIMENSIONS (Shipping Carton)	DIMENSIONS UNPACKAGED	WEIGHT (Shipping Carton)	WEIGHT (UNPACKAGED)
GX60-6019X		130 x 120 x 55 mm (5 x 5 x 2 in)		0.425 kg (0.94 lbs)

SAFETY STANDARDS

IEC 62368-1:2018
EN IEC 62368-1:2020+A11:2020
BS EN IEC 62368-1:2020+A11:2020
UL 62368-1:2019, CSA C22.2 No. 62368-1:19

CERTIFICATIONS

USA	EMC/EMI: CFR47, FCC part 15, Subpart B (class B) RF: FCC part 15, Subpart C
CANADA	EMC/EMI: ICES-003 issue 7:2020 (class B) RF: RSS-210 issue 11:2024
EUROPE	EMC/EMI: EN 55032:2015+A1:2020, EN 55035:2017+A11:2020 HEALTH: EN 50385:2017 RED: EN 301 489-1, EN 301 489-17, EN 303 722
UK	EMC/EMI: BS EN 55032:2015+A1:2020, BS EN 55035:2017+A11:2020 HEALTH: BS EN 50385:2017 UKCA: EN 301 489-1, EN 301 489-17, EN 303 722

PACKAGE CONTENTS

- One Proxim GX60-6019X unit with integrated 90-degree beam forming antenna
- Two PG16 weather proofing cable glands
- One power injectors and country specific power cords
- One mounting backplate and hose clamp

MTBF & WARRANTY

>450 000 hours, 1-year warranty.

GX60 Antenna and Proxim Antenna Kits

The GX60 includes an integrated 90° beam-forming antenna and it can be paired with a Proxim antenna kit to convert the radio from a wide beam-steering device to a highly directional one.

The modular kits attach quickly and allow installers to scale performance based on distance, density, and terrain from short-range PMP to long-distance precision PTP. Each kit features beam steering and distinct patterns. The antenna kits are ordered separately from the GX60 device.

The following optional high-gain directional antenna kits are compatible with the GX60 device:

ANTENNA KITS

GX60-0633-AK

Antenna Gain	33dBi
Beam Steering	6° x 6°
Dimensions (approximate)	5inx5inx5in (13cmx13cmx13cm)
Mounting Bracket	L-style bracket included

GX60-0437-AK

Antenna Gain	37dBi
Beam Steering	4° x 4°
Dimensions (approximate)	7inx6inx6in (18cmx15cmx15cm)
Mounting Bracket	Not included (GX60-MNT recommended)

GX60-0242-AK

Antenna Gain	42dBi
Beam Steering	2° x 2°
Dimensions (approximate)	12inx12inx3in (30cmx30cmx8cm)
Mounting Bracket	Not included (GX60-MNT recommended)

GX60-9030-AK

Antenna Gain	30dBi
Beam Steering	90° x 10°
Dimensions (approximate)	7inx12inx6in (18cmx30cmx15cm)
Mounting Bracket	Not included (GX60-MNT recommended)

GX60-MNT

Dimensions (approximate)	6inx4inx4in (15cmx10cmx10cm)
Max Pole Diameter	50mm/2in with included clamp; unlimited with hose clamp (not incl.)
Elevation Adjustment	+/- 15°
Azimuth Adjustment	+/- 15°

ANTENNA PATTERNS

GX60-0242-AK

H-pol Azimuth

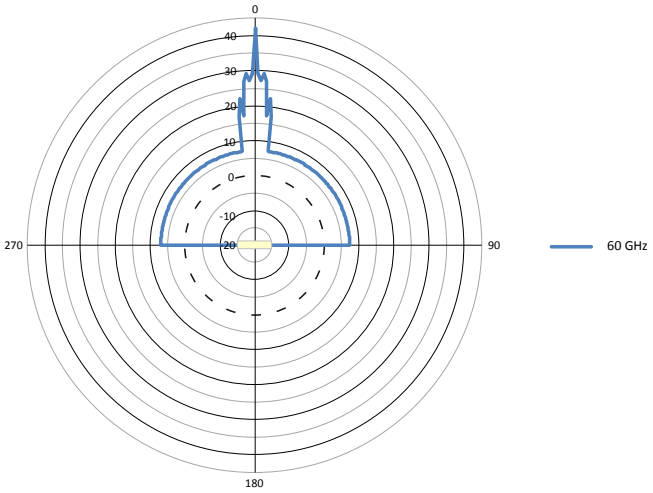

H-pol Elevation

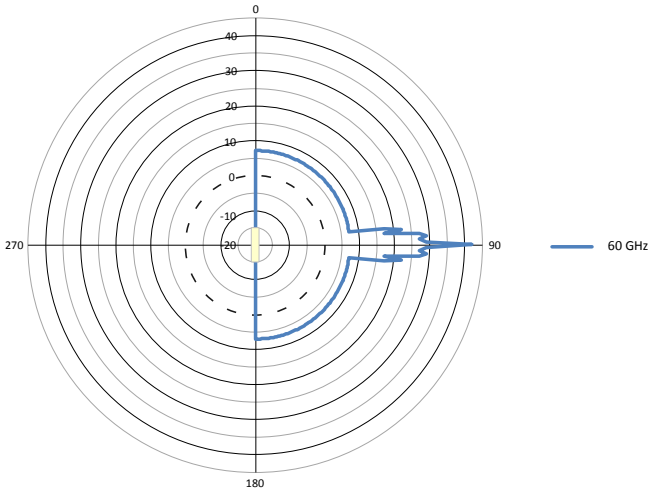

GX60-0437-AK

H-pol Azimuth

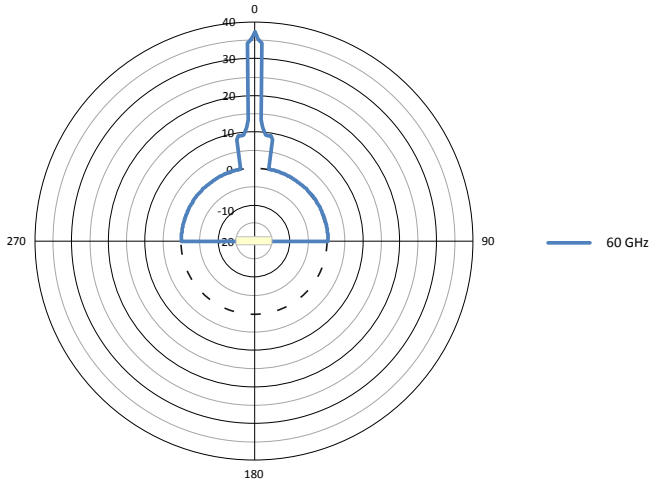

H-pol Elevation

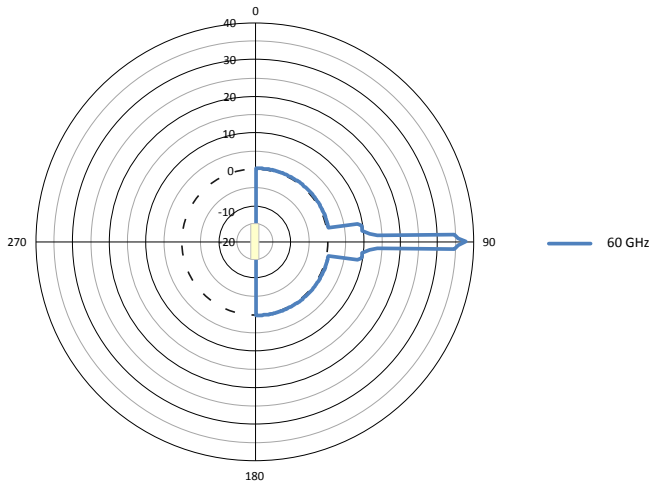

GX60-0633-AK

H-pol Azimuth

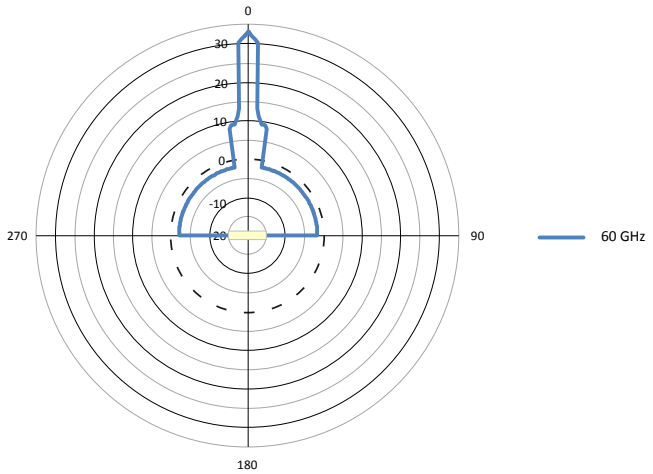

H-pol Elevation

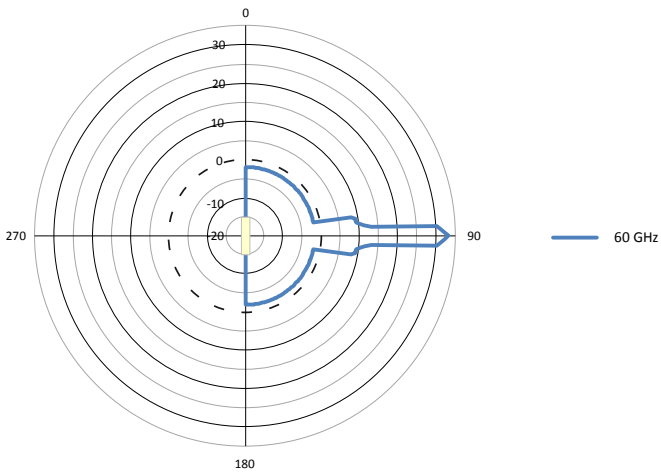

H-pol Azimuth

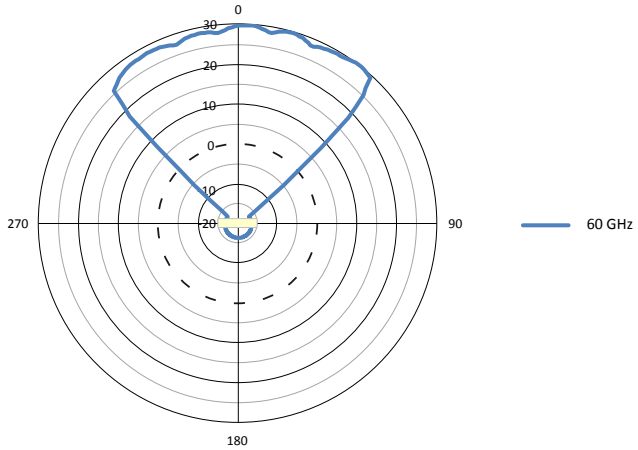

H-pol Elevation

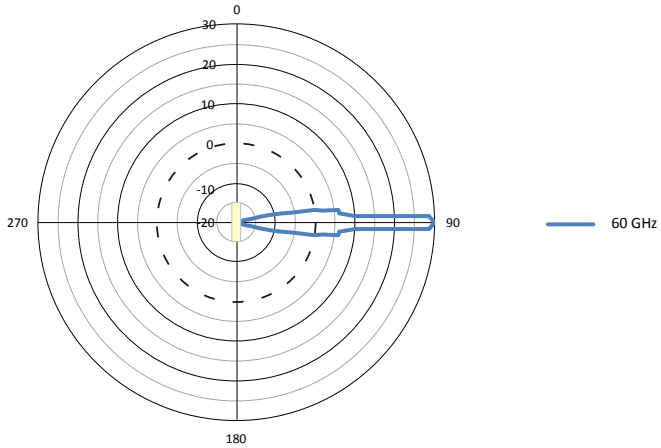

Ordering Information

Commcode	Description	CPN
GX60-9030-AK	Proxim GX60 Antenna Kit, 30 dBi - 90 degree, No Moun	949-00176
GX60-0633-AK	Proxim GX60 Antenna Kit, 33 dBi - 06 degree, Mounting Bracket	949-00177
GX60-0437-AK	Proxim GX60 Antenna Kit, 37 dBi - 04 degree, No Mount	949-00178
GX60-0242-AK	Proxim GX60 Antenna Kit, 42 dBi - 02 degree, No Mount	949-00179
GX60-MNT	Proxim GX60 Precision Mounting Bracket	949-00180

ABOUT PROXIM WIRELESS :

Proxim Wireless is a global leader in advanced wireless broadband and WiFi solutions that deliver high performance and high availability communications.

Celebrating 40 years of pioneering wireless solutions, Proxim is recognized for unparalleled reliability, superior performance, and drive for innovation.

© 2026 Proxim Wireless Corporation. All rights reserved. Proxim is a registered trademark and the Proxim logo is a trademark of Proxim Wireless Corporation.
All other trademarks mentioned herein are property of their respective owners. Specifications are subject to change without notice.